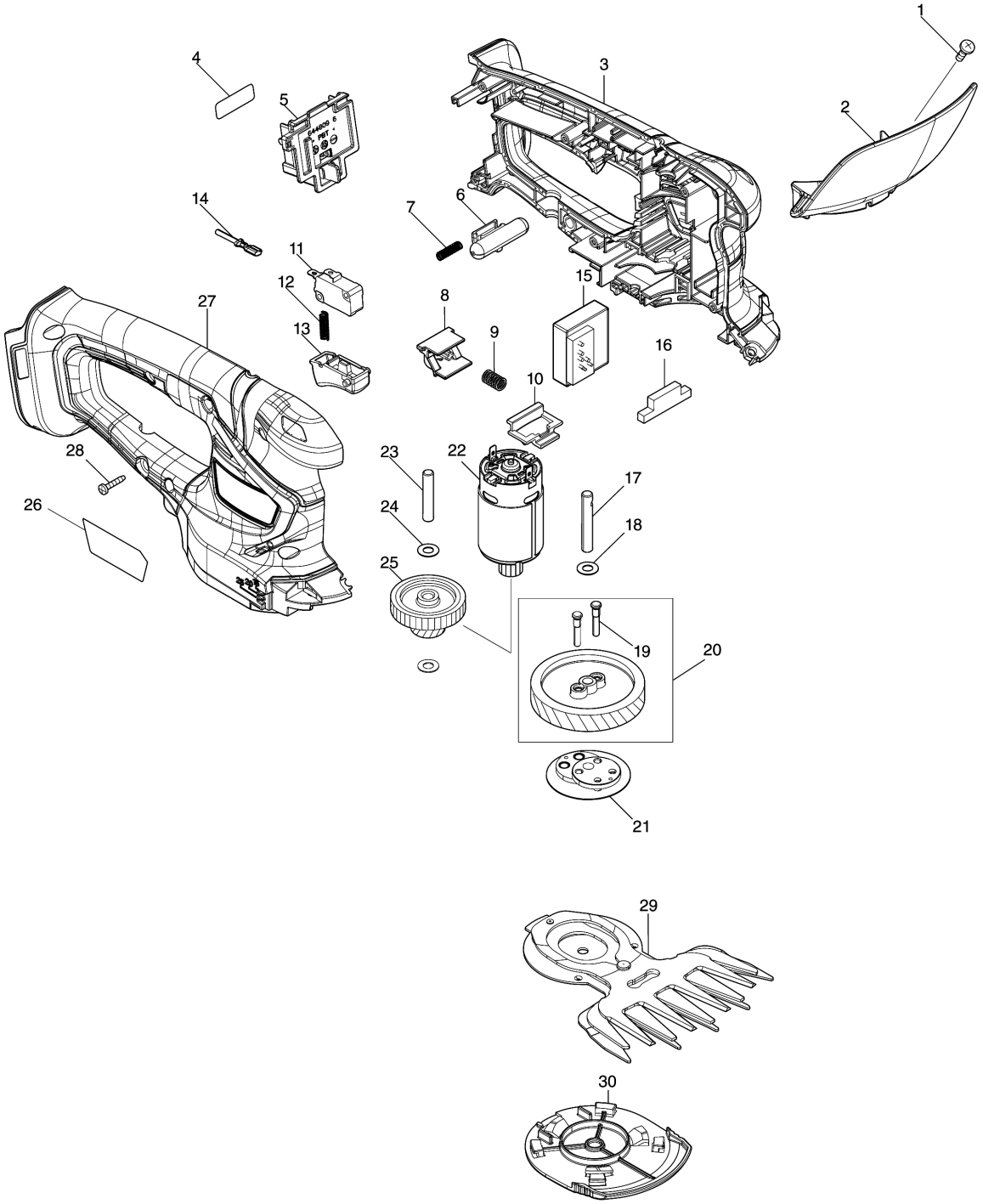Model No.DUM111 110MM CORDLESS GRASS SHEAR